Fig. 1a

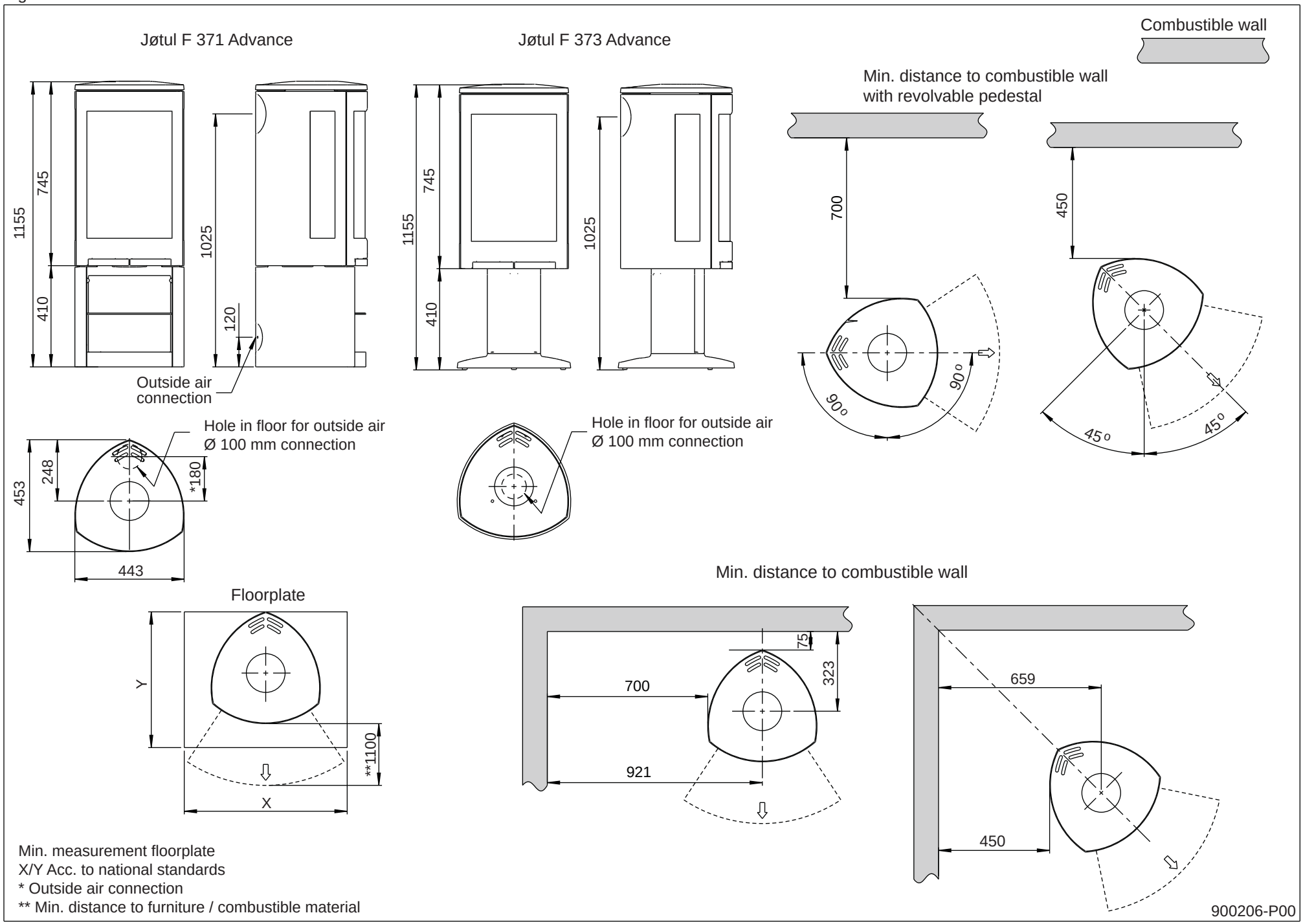


Min. measurement floorplate
X/Y Acc. to national standards
* Outside air connection
** Min. distance to furniture / combustible material